MARCO™

Specification Sheet

APEX™ SERIES DESK

Trapezoid Desk

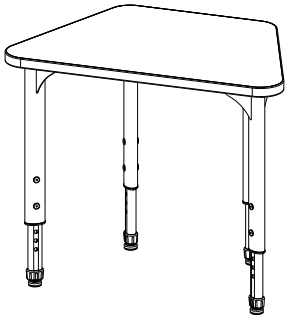

CONSTRUCTION

- Top constructed of 1-1/8" particleboard with thermally fused melamine surface on both sides
- Thermally fused 3mm PVC edge banding
- Pre-drilled holes for easy leg assembly
- Four 16-gauge steel legs mounted on a 12-gauge steel plate, fully coated with powder coat finish
- Lower legs constructed of 16-gauge steel with powder coat finish, tapped at 1" intervals for adjustment
- Nickel plated nylon swivel glides standard

FINISHES

LAMINATES Available with matching or colored edge band

- Fusion Maple
- Pewter Mesh
- New Age Oak
- High Rise
- Solar Oak
- Asian Night
- Gray Nebula
- Wild Cherry
- Boardwalk Oak
- Weathered Teak

DRY ERASE LAMINATES Available with colored edge band

- Glacier White
- Insipid
- Mirage
- Evergreen Mist
- Ocean
- Tsunami
- HPL White Dry Erase

OPTIONAL EDGE BAND COLORS

- Black
- Blue
- Red
- Gray
- Apple
- Orange
- Navy
- Blueberry
- Purple

METAL FRAME OPTIONS

- Black
- Gray

DIMENSIONS

Model #	Width	Depth	Height	Weight	Freight Cls
38-2283-Axxx	31"	20"	21"– 30"	36 lbs	125
38-2283-Bxxx	31"	20"	17"– 24"	31 lbs	125

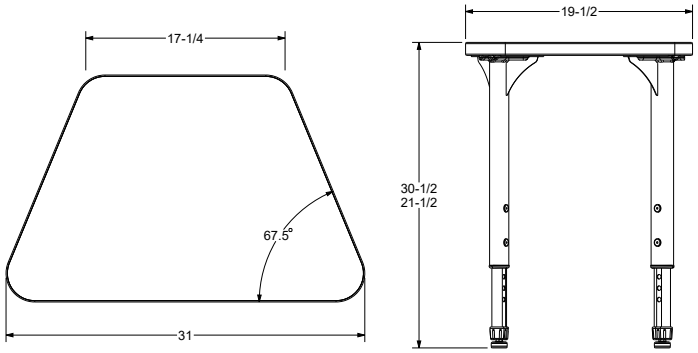

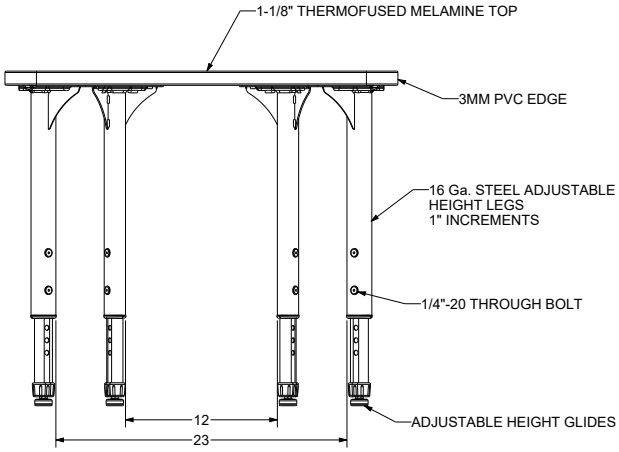

LEG SIZE OPTIONS

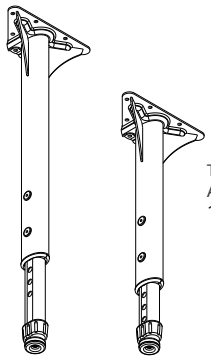

STANDARD LEG "A"
ADJUST FROM
21"- 30"

TODDLER LEG "B"
ADJUST FROM
17"- 24"

WARRANTY

10 Year Limited

CERTIFICATIONS

Worksurfaces are UL Greenguard Gold certified

This specification information is provided for general reference only and is subject to change without notice. While every effort has been made to ensure accuracy, Marco makes no warranties, express or implied, regarding the completeness or correctness of the details presented. Users should always verify specifications with the latest product documentation before making any purchasing decisions.

© 2025 Marco Group Inc.